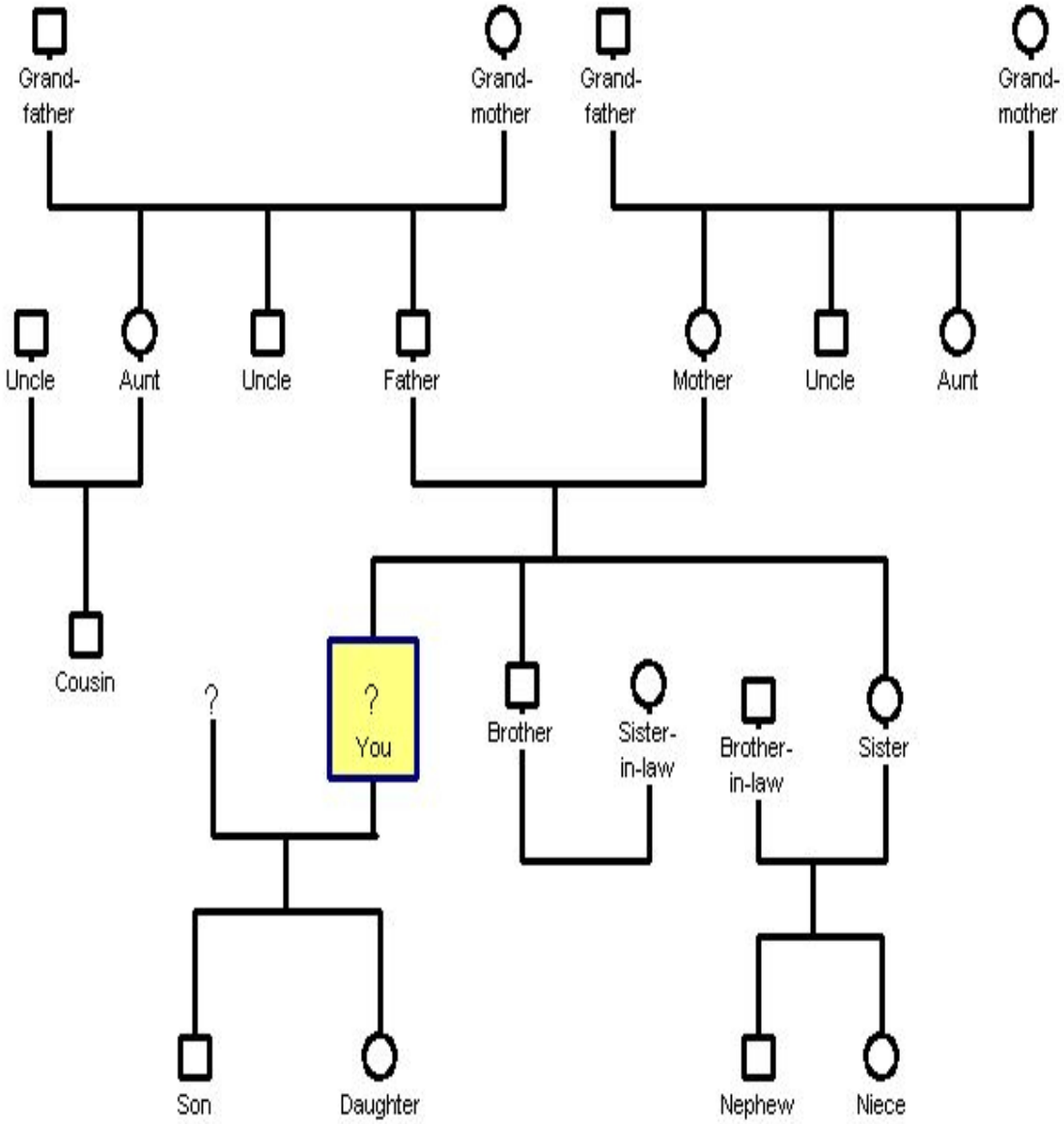
Grand-father
Grand-mother
Grand-father
Grand-mother
Uncle
Aunt
Uncle
Father
Mother
Uncle
Aunt
Cousin
?
?
You
Brother
Sister-in-law
Brother-in-law
Sister
Son
Daughter
Nephew
Niece